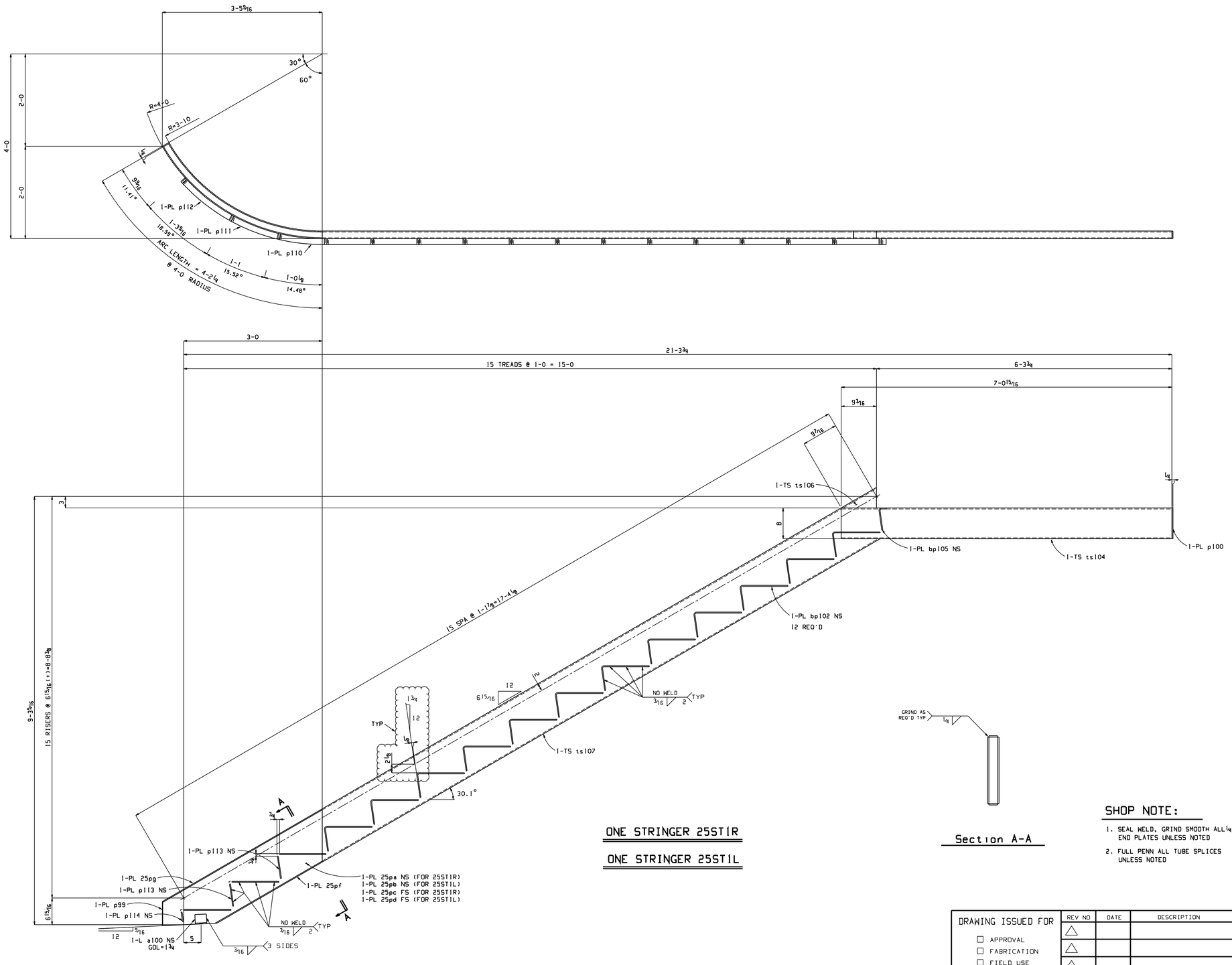

ONE STRINGER 25STIR

ONE STRINGER 25STIL

Section A-A

SHOP NOTE:

1. SEAL WELD, GRIND SMOOTH ALL 1/4" END PLATES UNLESS NOTED
2. FULL PENN ALL TUBE SPLICES UNLESS NOTED

BILL OF MATERIAL

MARK	QUAN. TOTAL	SHAPE	LENGTH		REMARKS	WT. UNIT	WEIGHT TOTAL
25STIR	ONE	STRINGER				690	690
ts104	1	TS8x2x1/4	7	0 15/16	A500B	111	111
ts107	1	TS12x2x1/4	13	11 3/16	A500B	313	313
ts106	1	TS12x2x1/4	0	10 3/16	A500B	20	20
p100	1	PL 1/4x2	0	8	A36	1	1
bp102	12	BPL 1/4x1 1/2	1	6 1/2	A36	2	24
bp105	1	BPL 1/4x1 1/2	0	7	A36		
25pa	1	PL 1/4x11 1/2	6	0	L/O A36	59	59
25pc	1	PL 1/4x11 1/2	6	0	L/O A36	59	59
25pf	1	PL 1/4x12	4	6	L/O A36	46	46
25pg	1	PL 1/4x12	4	6	L/O A36	46	46
p99	1	PL 1/4x2	0	7	L/O A36	1	1
a100	1	L3x3x1/4	0	4	A36	2	2
p110	1	PL 1/4x1 7/8	1	0 1/2	A36	2	2
p111	1	PL 1/4x1 15/16	1	1 3/8	A36	2	2
p112	1	PL 1/4x2 1/8	1	4	A36	2	2
p113	2	PL 1/4x1 1/2	0	5 3/4	A36	1	2
p114	1	PL 1/4x1 1/2	0	2 1/2	A36		
25STIL	ONE	STRINGER				695	695
ts104	1	TS8x2x1/4	7	0 15/16	A500B	111	111
ts107	1	TS12x2x1/4	13	11 3/16	A500B	313	313
ts106	1	TS12x2x1/4	0	10 3/16	A500B	20	20
p100	1	PL 1/4x2	0	8	A36	1	1
bp102	12	BPL 1/4x1 1/2	1	6 1/2	A36	2	24
bp105	1	BPL 1/4x1 1/2	0	7	A36	1	1
25pb	1	PL 1/4x12	6	0	L/O A36	61	61
25pd	1	PL 1/4x12	6	0	L/O A36	61	61
25pf	1	PL 1/4x12	4	6	L/O A36	46	46
25pg	1	PL 1/4x12	4	6	L/O A36	46	46
p99	1	PL 1/4x2	0	7	L/O A36	1	1
a100	1	L3x3x1/4	0	4	A36	2	2
p110	1	PL 1/4x1 7/8	1	0 1/2	A36	2	2
p111	1	PL 1/4x1 15/16	1	1 3/8	A36	2	2
p112	1	PL 1/4x2 1/8	1	4	A36	2	2
p113	2	PL 1/4x1 1/2	0	5 3/4	A36	1	2
p114	1	PL 1/4x1 1/2	0	2 1/2	A36		
		FIELD BOLTS					
	2	5/8 Dia STUD ANC	0	4 1/4			

Total weight :1385

NOTES

MATERIAL — ASTM A36 UNLESS NOTED
WELD — E70XX ELECTRODES
OPEN HOLES — 13/16 UNLESS NOTED

PAINT: PREP: SP3
PRIME: RED PRIMER
FINISH:

(SHOP BOLTS SNUG TIGHT (UNO)
BOLTS: A325 BLACK HEX HEAD (U.N.O.)

DRAWINGS ARE SUBMITTED FOR APPROVAL IN ACCORDANCE WITH AISC MANUAL NINTH EDITION - PAGE 5-229 PARAGRAPH 4.2 AND PAGE 5-250 SECTION 4.

DRAWING ISSUED FOR
- ☐ APPROVAL
- ☐ FABRICATION
- ☐ FIELD USE

REV NO	DATE	DESCRIPTION	BY
△			
△			
△			

BY	CHKD	APPD	DATE	JOB NUMBER	SHEET NO. 25
					REV. NO. △

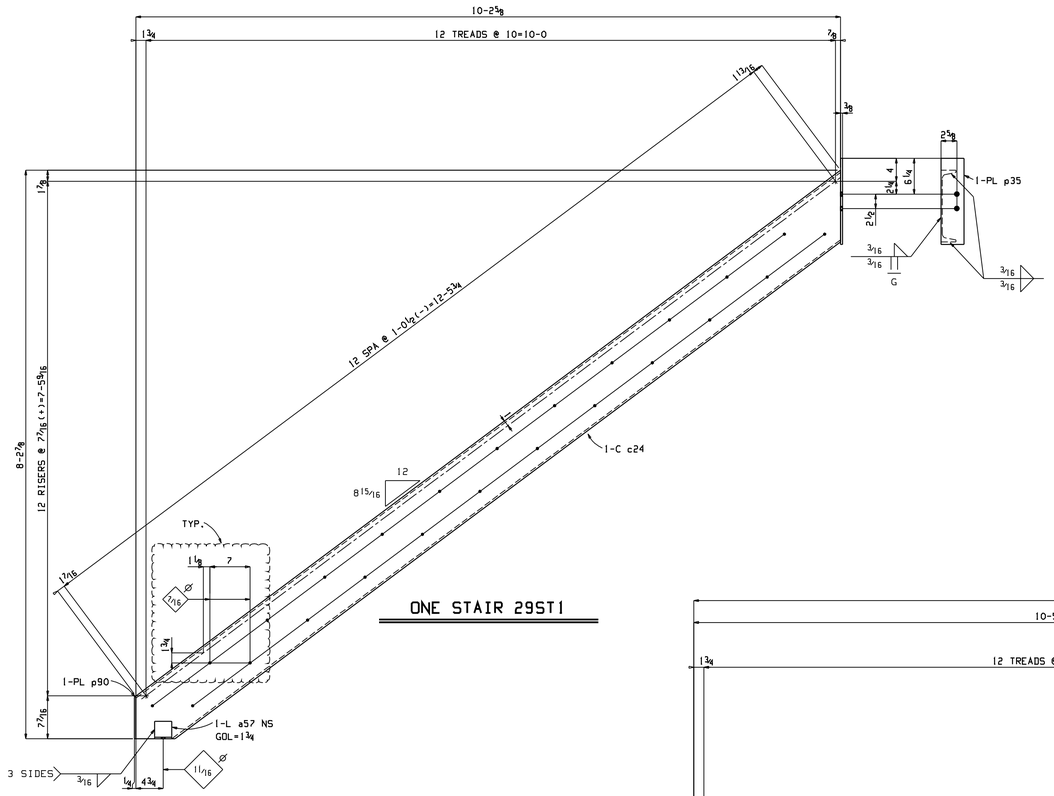

ONE STAIR 29ST1

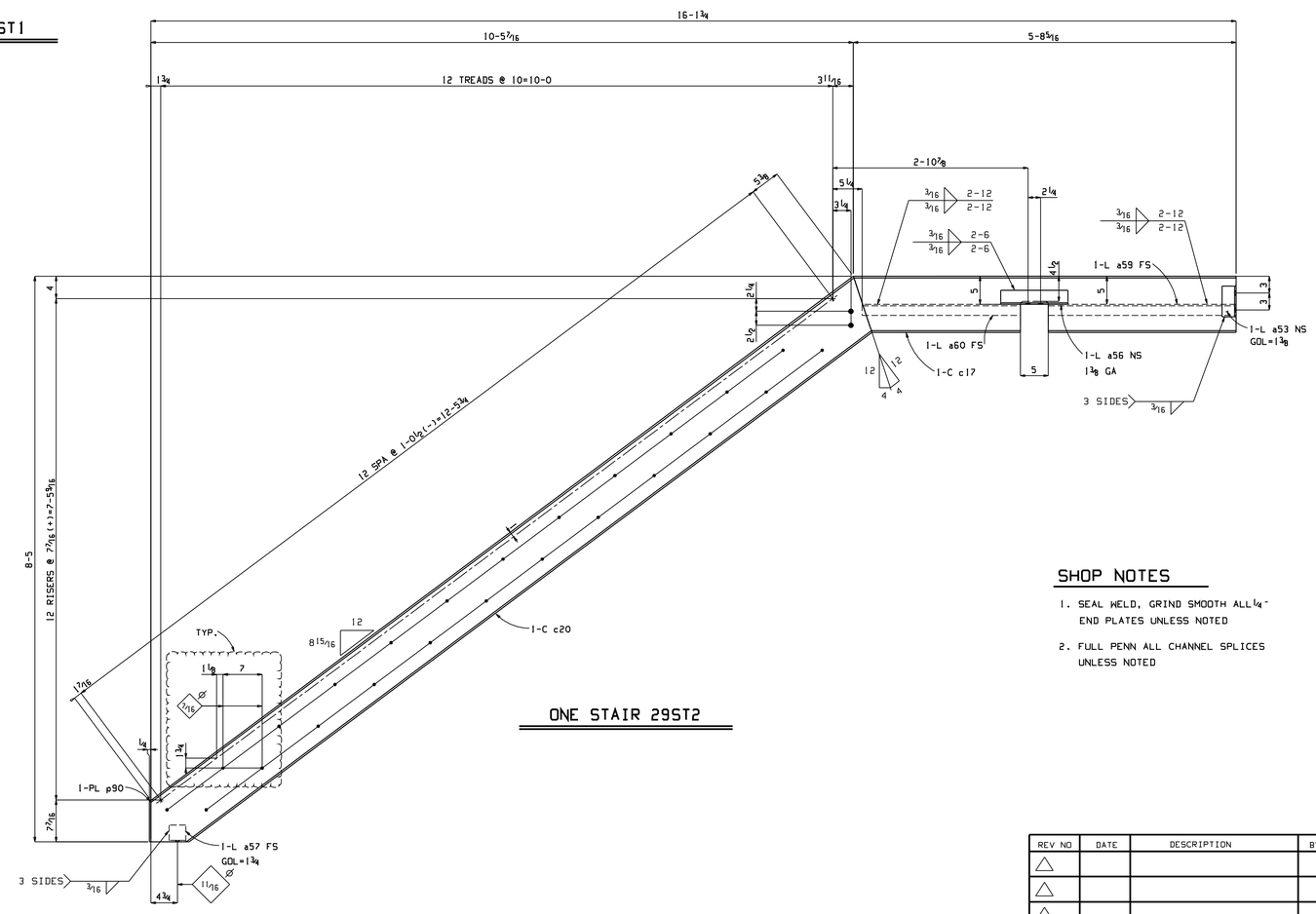

ONE STAIR 29ST2

SHOP NOTES

1. SEAL WELD, GRIND SMOOTH ALL 1/4" END PLATES UNLESS NOTED
2. FULL PENN ALL CHANNEL SPLICES UNLESS NOTED

BILL OF MATERIAL

MARK	QUAN. TOTAL	SHAPE	LENGTH		REMARKS	WT. UNIT	WEIGHT TOTAL
29ST1	ONE	STAIR				209	209
c24	1	C10x15.3	13	1 7/16	A36	201	201
a57	1	L3x3x1/4	0	3	A36	1	1
p35	1	PL3/8x3 7/8	1	3	A36	6	6
p90	1	PL1/4x2 5/8	0	7 1/4	A36	1	1
		FIELD BOLTS					
	2	3/4 Dia A325N	0	1 3/4	1HD WASH		
	1	1/2 Dia STUD ANC	0	2 3/4			
	24	3/8 Dia MACH BOLT	0	1			
	24	3/8 Dia HEX NUT					
	24	3/8 Dia FLAT WASH					
29ST2	ONE	STAIR				317	317
c20	1	C10x15.3	13	4 15/16	A36	205	205
c17	1	C10x15.3	5	8 5/16	A36	87	87
a57	1	L3x3x1/4	0	3	A36	1	1
a56	1	L2 1/2x2 1/2x1/4	1	0	A36	4	4
a53	1	L2 1/2x2 1/2x1/4	0	5 1/2	A36	2	2
a59	1	L2x2x1/4	2	9 1/2	A36	9	9
a60	1	L2x2x1/4	2	4 1/4	A36	8	8
p90	1	PL1/4x2 5/8	0	7 1/4	A36	1	1
		FIELD BOLTS					
	2	3/4 Dia A325N	0	2	1HD WASH		
	2	3/4 Dia A325N	0	1 3/4	1HD WASH		
	1	1/2 Dia STUD ANC	0	2 3/4			
	24	3/8 Dia MACH BOLT	0	1			
	24	3/8 Dia HEX NUT					
	24	3/8 Dia FLAT WASH					

Total weight :526

NOTES

MATERIAL — ASTM A36 UNLESS NOTED
WELD — E70XX- ELECTRODES
OPEN HOLES — 1 3/16 UNLESS NOTED

PAINT: PREP: SP3
PRIME: GRAY 2 MIL, DFT
FINISH:
SHOP BOLTS SNUG TIGHT (U.N.O.)
BOLTS: A325 BLACK HEX HEAD (U.N.O.)

DRAWINGS ARE SUBMITTED FOR APPROVAL IN ACCORDANCE WITH AISC MANUAL NINTH EDITION - PAGE 5-229 PARAGRAPH 4.2 AND PAGE 5-250 SECTION 4.

REV NO	DATE	DESCRIPTION	BY
△			
△			
△			

BY	CHKD	APPD	DATE	JOB NUMBER	SHEET NO. 29
					REV. NO. △